THE INFORMATION DISCLOSED ON THIS DRAWING IS PROPRIETARY. IT IS ISSUED FOR ENGINEERING USE ONLY AND MAY NOT BE REPRODUCED OR DISCLOSED, IN WHOLE OR IN PART, TO ANYONE WITHOUT THE DIRECT WRITTEN PERMISSION OF GRECH MOTORS LLC.
PARTS OR TOOLS MANUFACTURED TO MEET THE REQUIREMENTS OF THIS DRAWING MAY NOT BE USED BY OR SOLD TO ANYONE WITHOUT THE DIRECT WRITTEN PERMISSION OF GRECH MOTORS LLC.

REVISIONS			
REV	DESCRIPTION	DATE	APPD

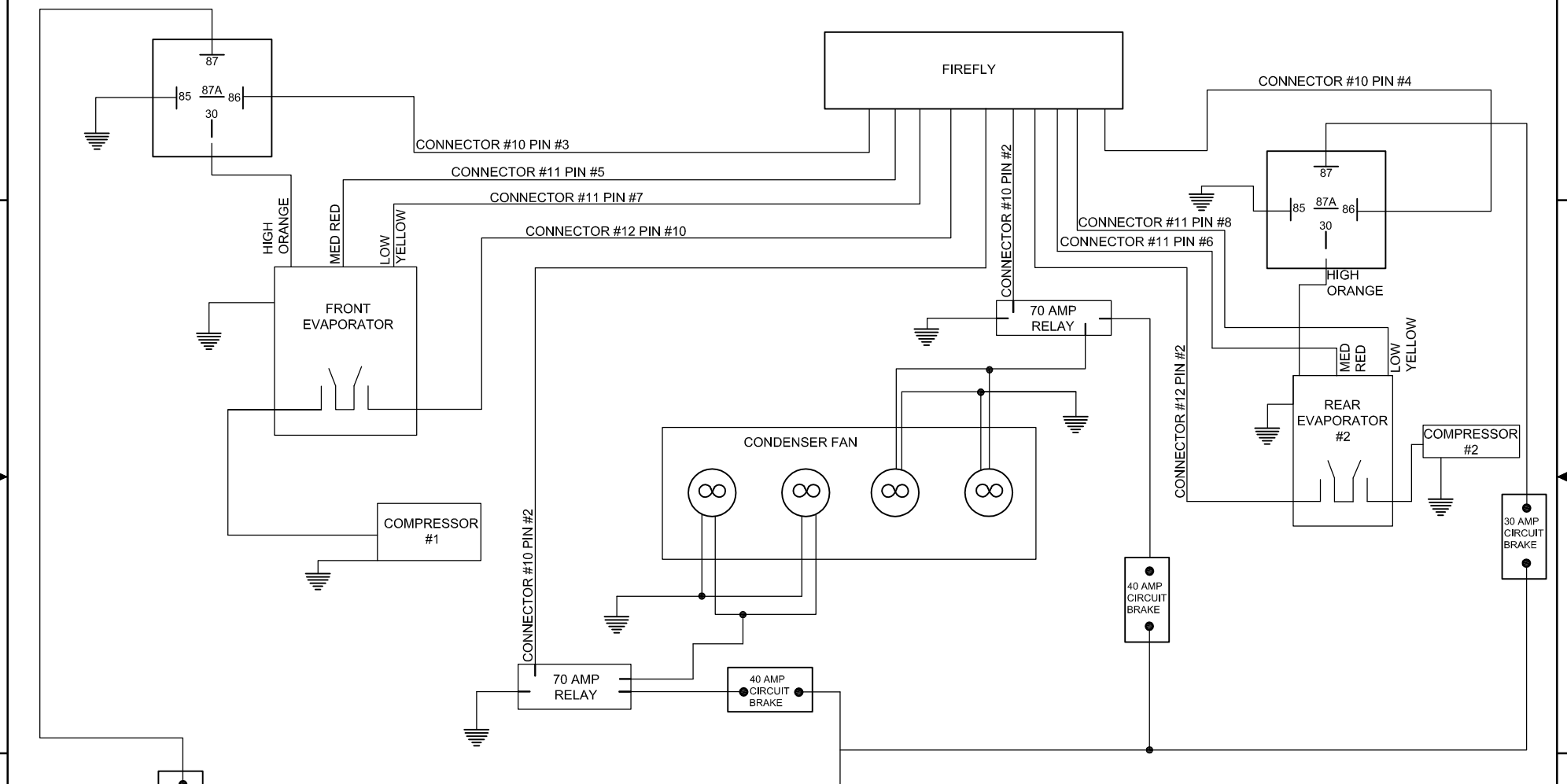

	UNLESS OTHERWISE SPECIFIED						
	DO NOT SCALE THIS DRAWING.		ALL DIMENSIONS ARE IN INCHES.				
	ALL DIAMETERS TO BE CONCENTRIC TO COMMON CENTER LINE WITHIN .005 TIR.						
	CYLINDRICAL SURFACES AND FACES TO BE SQUARE WITHIN .005 PER INCH.						
	THREADS PER ASA AND SAE STANDARDS.						
	BREAK ALL SHARP EDGES .005/.015 R OR .005/.015 X 45°±5° CHAMFER.						
	HOLE DIA	TOL-.002	HOLE DIA	TOL-.002	HOLE DIA	TOL-.002	
XX-XXXX	.013-.125 .126-.250	+.003 +.004	.251-.500 .501-.750	+.005 +.007	.751-1.000 1.001-2.000	+.009 +.011	
NEXT ASSEMBLY	TOLERANCES ON: DECIMALS .XXX=±.010 .XX=±.03		FRACTIONS ±1/64	ANGLES ±1°	SURFACE FINISH 63		
	MATERIAL:		FINISH:				
DR GABRIELA MORALES	05/14/2015		DESIGN				
CHK			APPD				

GRECH MOTORS LLC

SPEC CONTROL DWG.

A/C WIRING SCHEMATIC

FIREFLY CONTROL MODULE

LIMOBUS FORD F-550

SIZE	PART NUMBER	REVISION
C	N/A	N/C
	DRAWING NUMBER	

SCALE: NONE SHEET 1 OF 1